DocuSign Envelope ID: 30BC06DA-8502-46FC-83DC-478BC8625065

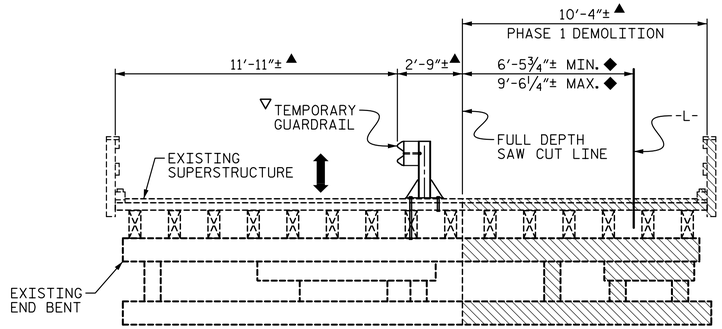

PHASE 1A

LOOKING UPSTATION
(END BENT 2 SHOWN, END BENT 1 SIMILAR)

1. VERIFY EXISTING BRIDGE DIMENSIONS. CONTACT ENGINEER IF FIELD MEASUREMENTS VARY FROM PLAN DIMENSIONS.
2. ANCHOR TEMPORARY GUARDRAIL THROUGH EXISTING BRIDGE DECK AND JOIST WITH 1"Ø BOLTS, WASHERS AND NUTS AS SHOWN.
3. SAW CUT AND REMOVE RIGHT PORTION OF EXISTING BRIDGE.

PORTION OF EXISTING STRUCTURE TO BE DEMOLISHED

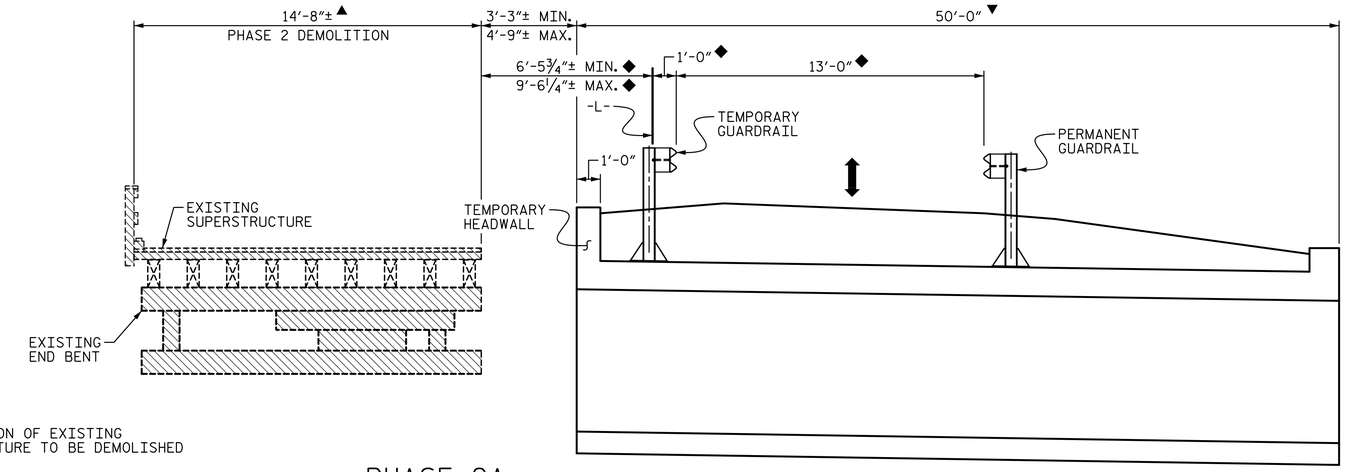

PHASE 2A

LOOKING UPSTATION
(END BENT 2 SHOWN, END BENT 1 SIMILAR)

1. SHIFT TRAFFIC TO NEWLY CONSTRUCTED RIGHT SIDE OF CULVERT.
2. REMOVE REMAINDER OF EXISTING BRIDGE.

▲ MEASURED PERPENDICULAR FROM EDGE OF EXISTING BRIDGE

◆ MEASURED RADIAL TO PROPOSED -L-

▼ MEASURED ALONG PROPOSED CULVERT

▽ MAXIMUM GUARDRAIL POST SPACING ON EXISTING BRIDGE SHALL BE 3'-1½"

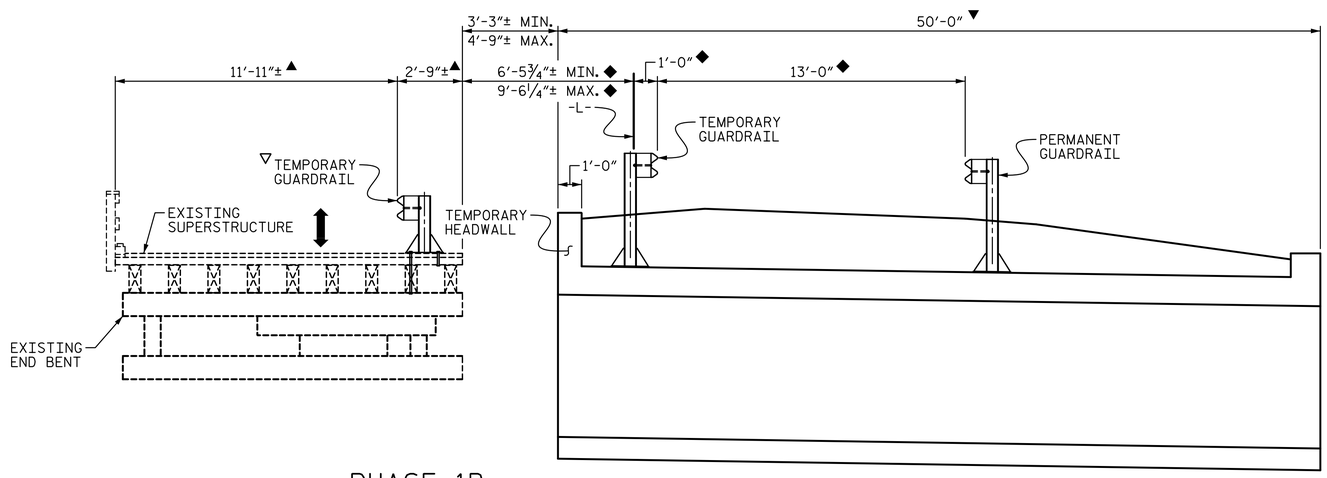

PHASE 1B

LOOKING UPSTATION
(END BENT 2 SHOWN, END BENT 1 SIMILAR)

1. CONSTRUCT RIGHT PORTION OF PROPOSED CULVERT.
2. CONSTRUCT TEMPORARY HEADWALL.
3. ANCHOR TEMPORARY GUARDRAIL TO CULVERT, SEE SHEET C-11 FOR DETAILS.

PROJECT NO. B-6028

MACON COUNTY

STATION: 15+25.00 -L-

SHEET 2 OF 11

DocuSigned by: D. Dailey 68C7E5EFDAFF4...

NORTH CAROLINA PROFESSIONAL SEAL 038640 ENGINEER WESLEY JONES

12/10/2021

STV 100 Years

STV ENGINEERS, INC.
900 West Trade St., Suite 715
Charlotte, NC 28202
NC License Number F-0991

DOCUMENT NOT CONSIDERED FINAL UNLESS ALL SIGNATURES COMPLETED

STATE OF NORTH CAROLINA
DEPARTMENT OF TRANSPORTATION
RALEIGH

CULVERT STAGING PLAN (SHEET 1 OF 2)

REVISIONS						SHEET NO.
NO.	BY:	DATE:	NO.	BY:	DATE:	C-2
1			3			TOTAL SHEETS
2			4			14

DRAWN BY :	LEM	DATE :	8-17
CHECKED BY :	JAD	DATE :	11-17
DESIGN ENGINEER OF RECORD :	JWJ	DATE :	12-21

JJones 12/1/2021 6:24:10 PM R:\Structures\ustation\401_003_I78P_I4_R_I57_SMU_RCBC02.dgn