DocuSign Envelope ID: 30BC06DA-8502-46FC-83DC-478BC8625065

PILE INFORMATION

PILE NO.	PILE SIZE	STATION ▲	OFFSET ▲	ANGLE ▲	TOP OF COPING ELEV.	TOP OF PILE ELEV.	TOP OF 2'-6" Ø EXCAVATION	BOT. OF PILE DRILLED HOLE ELEV. ■	TOTAL ■ PILE LENGTH (FT.)
1	HP 14x73	13+33.05	19.06'	00°-00'-00"	2227.73	2227.00	2222.50	2197.50	29.50
2	HP 14x73	13+40.55	19.06'	00°-00'-00"	2228.69	2228.00	2222.50	2197.50	30.50
3	HP 14x73	13+48.05	19.06'	00°-00'-00"	2229.65	2229.00	2222.50	2197.50	31.50
4	HP 14x73	13+55.55	19.06'	00°-00'-00"	2230.61	2230.00	2222.50	2197.50	32.50
5	HP 14x73	13+63.05	19.06'	00°-00'-00"	2231.57	2231.00	2222.50	2197.50	33.50
6	HP 14x73	13+70.55	19.06'	00°-00'-00"	2231.61	2231.00	2222.50	2197.50	33.50
7	HP 14x73	13+78.05	19.06'	00°-00'-00"	2231.65	2231.00	2222.50	2197.50	33.50
8	HP 14x73	13+85.64	19.06'	00°-16'-10"	2231.69	2231.00	2222.50	2197.50	33.50
9	HP 14x73	13+93.92	19.79'	05°-04'-07"	2231.72	2231.00	2222.50	2197.50	33.50
10	HP 14x73	14+02.17	20.31'	02°-52'-10"	2231.76	2231.00	2222.50	2197.50	33.50
11	HP 14x73	14+10.45	20.54'	00°-39'-43"	2231.80	2231.00	2222.50	2197.50	33.50
12	HP 14x73	14+18.75	20.48'	-01°-32'-51"	2231.84	2231.00	2222.50	2197.50	33.50
13	HP 14x73	14+27.02	20.13'	-03°-45'-09"	2232.09	2231.50	2222.50	2197.50	34.00
14	HP 14x73	14+35.38	19.63'	06°-23'-04"	2232.34	2231.50	2222.50	2197.50	34.00
15	HP 14x73	14+43.61	20.32'	04°-11'-25"	2232.37	2231.50	2222.50	2197.50	34.00
16	HP 14x73	14+51.89	20.72'	01°-59'-01"	2232.41	2231.50	2222.50	2197.50	34.00
17	HP 14x73	14+60.19	20.84'	00°-13'-44"	2232.44	2231.50	2222.50	2197.50	34.00
18	HP 14x73	14+68.49	20.66'	-02°-26'-26"	2232.47	2231.50	2222.50	2197.50	34.00

▲ ALL STATIONING AND OFFSETS ARE ALONG THE ℄ -L-. OFFSET IS TO CENTER OF PILE AND DRILLED HOLE.

■ BOTTOM OF PILE & DRILLED HOLE ELEVATIONS ARE BASED ON A DRILLED HOLE LENGTH OF 25'. IF ROCK IS ENCOUNTERED SHALLOWER, DRILL A 4.5' ROCK SOCKET AND ADJUST THE PILE LENGTH/ELEVATION APPROPRIATELY.

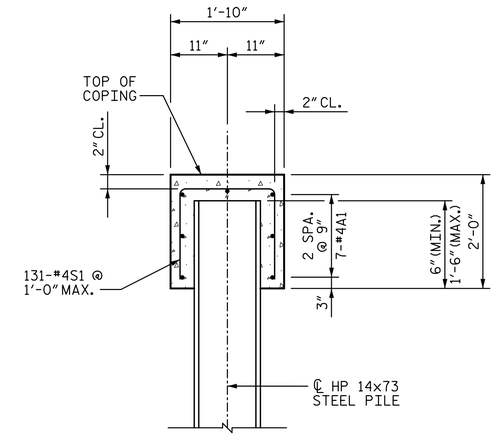

COPING DETAIL

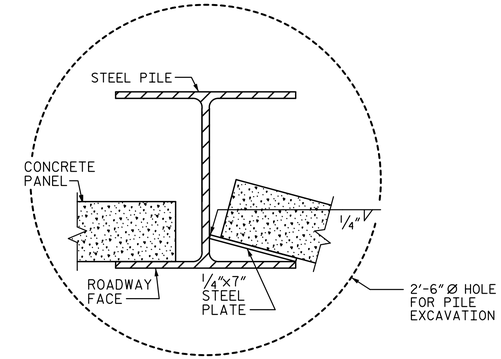

TYPICAL WALL TURN DETAIL

(CORNER AT PILE 8 SHOWN, CORNER AT PILE 14 SIMILAR)

CAST-IN-PLACE COPING

BAR	NO.	SIZE	TYPE	LENGTH	WEIGHT
◆ A1	35	#4	STR.	26'-6"	620
H1	7	#4	STR.	2'-11"	14
S1	131	#4	1	4'-10"	423
S2	2	#4	2	5'-10"	8
REINFORCING STEEL				LBS.	1,065
CLASS A CONCRETE				CU. YDS.	15.0

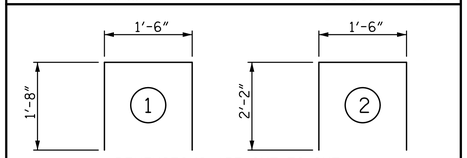

◆ COPING REINFORCEMENT LENGTH IS BASED ON 27'-0" LONG SEGMENTS.

IF THE CONTRACTOR ELECTS TO PLACE CONSTRUCTION JOINTS AT ANY OTHER INTERVALS, REINFORCEMENT SHALL BE ADJUSTED ACCORDINGLY AT NO ADDITIONAL COST.

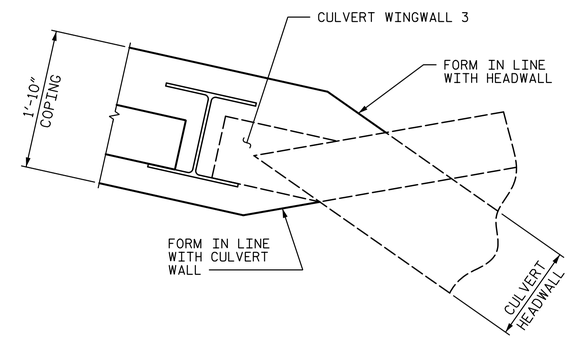

END WALL DETAIL

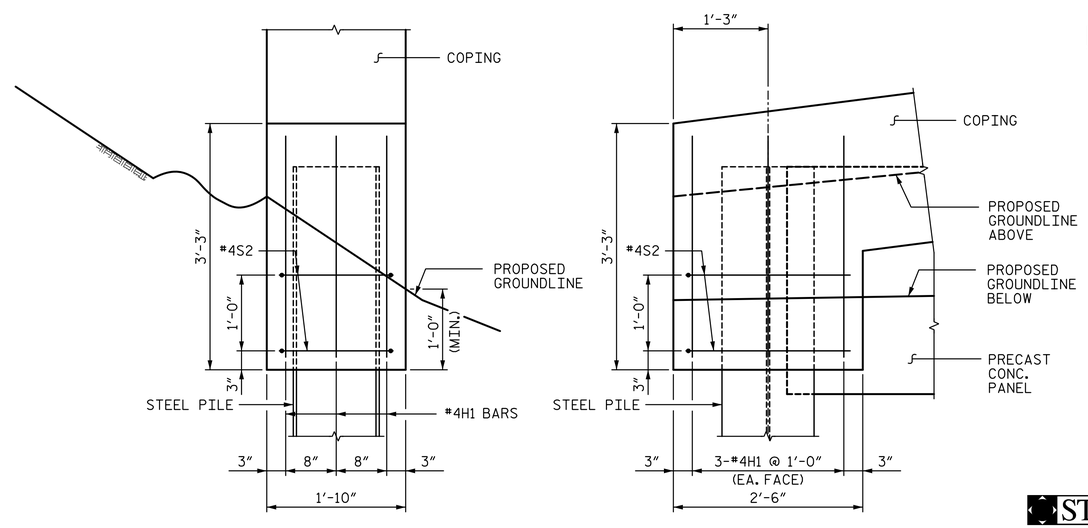

END VIEW

SIDE VIEW

BEGIN WALL DETAIL

PROJECT NO. B-6028

MACON COUNTY

STATION: 15+25.00 -L-

SHEET 3 OF 3

STATE OF NORTH CAROLINA
DEPARTMENT OF TRANSPORTATION
RAI FTGH

SOLDIER PILE RETAINING WALL

DocuSigned by: D. Dailey 68C7E5EFD4E8...

NORTH CAROLINA PROFESSIONAL SEAL 038640 ENGINEER WESLEY JONES

12/10/2021

STV 100 Years
STV ENGINEERS, INC.
900 West Trade St., Suite 715
Charlotte, NC 28202
NC License Number F-0991

DOCUMENT NOT CONSIDERED FINAL UNLESS ALL SIGNATURES COMPLETED

REVISIONS						SHEET NO.
NO.	BY:	DATE:	NO.	BY:	DATE:	W-3
1			3			TOTAL SHEETS
2			4			14

DRAWN BY :	TJT	DATE :	11-17
CHECKED BY :	JTG	DATE :	11-17
DESIGN ENGINEER OF RECORD :	JWJ	DATE :	9-18

JJones 12/1/2021 6:28:15 PM R:\Structures\ustation\401_027_17BP.14.R.157_SMU_SPRW03.dgn