DocuSign Envelope ID: 30BC06DA-8502-46FC-83DC-478BC8625065

PANEL INFORMATION

PANEL NO.	BOT. OF PANEL ELEV.	TOP OF PANEL ELEV	HEIGHT	NO. OF PANELS ◆		
				3′ PANEL	4′ PANEL	5′ PANEL
1	2223.00	2227.00	4.00		1	
2	2223.00	2228.00	5.00			1
3	2223.00	2229.00	6.00	2		
4	2223.00	2230.00	7.00	1	1	
5	2223.00	2231.00	8.00		2	
6	2223.00	2231.00	8.00		2	
7	2223.00	2231.00	8.00		2	
8	2223.00	2231.00	8.00		2	
9	2223.00	2231.00	8.00		2	
10	2223.00	2231.00	8.00		2	
11	2223.00	2231.00	8.00		2	
12	2223.00	2231.00	8.00		2	
13	2223.00	2231.00	8.00		2	
14	2223.00	2231.00	8.00		2	
15	2223.00	2231.00	8.00		2	
16	2223.00	2231.00	8.00		2	
17	2223.00	2231.00	8.00		2	

◆ IF 2 PANELS ARE REQUIRED TO CREATE REQUIRED PANEL HEIGHT, CONSTRUCT THE PANELS USING THE "PANEL END DETAILS".

3′ PRECAST PANEL
(3 REQUIRED)

BAR	NO.	SIZE	TYPE	LENGTH	WEIGHT
B1	12	#4	STR.	6′-8″	53
B2	18	#4	STR.	2′-8″	32
REINFORCING STEEL				LBS.	85
CLASS A CONCRETE				CU. YDS.	0.5

4′ PRECAST PANEL
(28 REQUIRED)

BAR	NO.	SIZE	TYPE	LENGTH	WEIGHT
B1	16	#4	STR.	6′-8″	71
B2	18	#4	STR.	3′-8″	44
REINFORCING STEEL				LBS.	115
CLASS A CONCRETE				CU. YDS.	0.7

5′ PRECAST PANEL
(1 REQUIRED)

BAR	NO.	SIZE	TYPE	LENGTH	WEIGHT
B1	20	#4	STR.	6′-8″	89
B2	18	#4	STR.	4′-8″	56
REINFORCING STEEL				LBS.	145
CLASS A CONCRETE				CU. YDS.	0.9

BILL OF MATERIAL

SOLDIER PILE RETAINING WALL	SQ. FT.	1,076.5

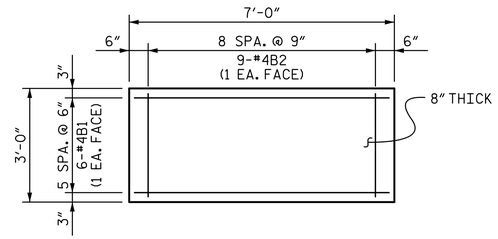

3′-0″ PRECAST PANELS

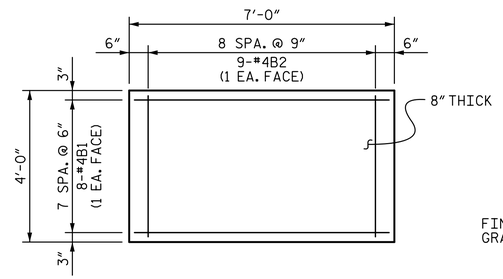

4′-0″ PRECAST PANELS

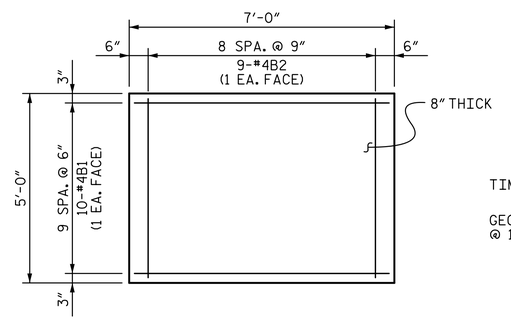

5′-0″ PRECAST PANELS

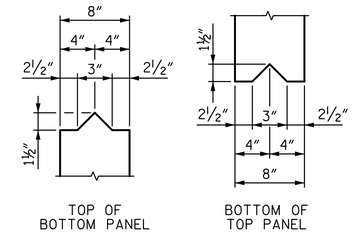

PANEL END DETAIL

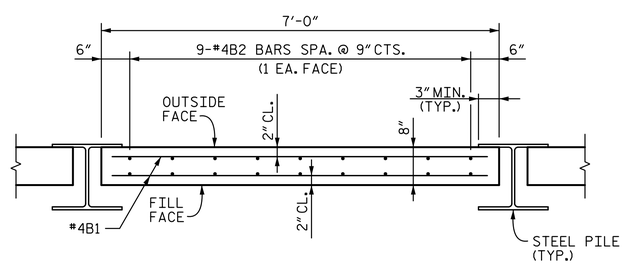

TYPICAL SECTION THRU PRECAST CONCRETE PANEL

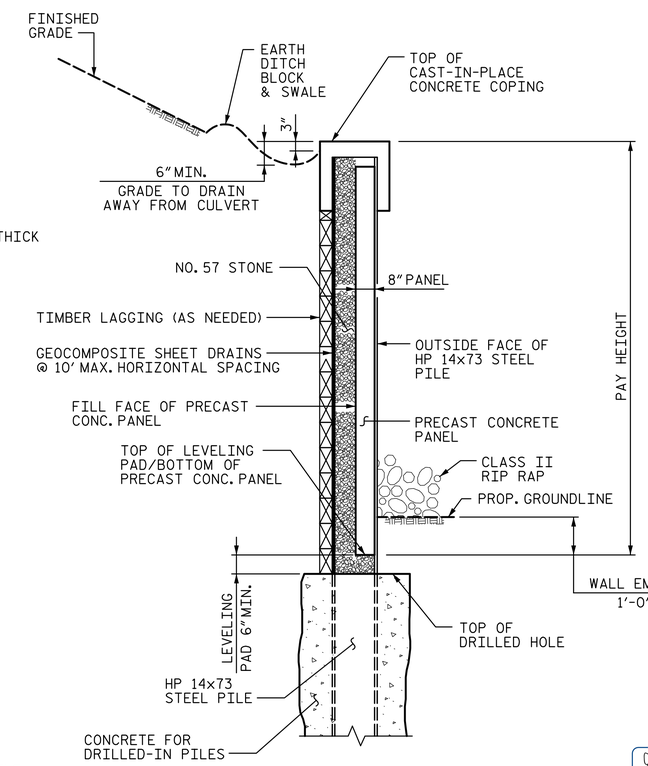

TYPICAL SECTION OF SOLDIER PILE RETAINING WALL

NOTES:

ALL PILES SHALL BE GALVANIZED IN ACCORDANCE WITH THE STANDARD SPECIFICATIONS.

THE CONTRACTOR SHALL FIELD VERIFY THAT THERE ARE NO CONFLICTS BETWEEN WALL SYSTEM AND EXISTING UTILITIES PRIOR TO INSTALLING ANY PORTION OF THE WALL.

THE BASE OF EACH BOTTOM PANEL SHALL BE LEVEL.

FOR SOLDIER PILE RETAINING WALLS, SEE SOLDIER PILE RETAINING WALLS PROVISION.

DRILLED IN PILES ARE REQUIRED.

USE A SOLDIER PILE RETAINING WALL WITH PRECAST CONCRETE PANELS THAT MEET SECTION 1077 OF THE STANDARD SPECIFICATIONS.

PAINT GALVANIZED PILES GRAY OR BLACK IN ACCORDANCE WITH ARTICLE 442-12 OF THE STANDARD SPECIFICATIONS.

BEFORE BEGINNING SOLDIER PILE WALL CONSTRUCTION, SURVEY WALL LOCATION AND SUBMIT A REVISED WALL PROFILE VIEW (WALL ENVELOPE) FOR REVIEW. DO NOT START CONSTRUCTION UNTIL THE REVISED WALL ENVELOPE IS ACCEPTED.

½″ EXPANSION JOINT MATERIAL SHALL BE PLACED EVERY 30′ MAX. DO NOT PLACE EXPANSION JOINT ABOVE A PILE. IF THE LOCATION FOR THE EXPANSION DIFFERS FROM WHAT IS DETAILED, THE CONTRACTOR IS RESPONSIBLE FOR FITTING REINFORCING STEEL IN COPING SUCH THAT 2″CL. IS MAINTAINED FROM THE EXPANSION JOINT.

FOR SUBMITTAL OF WORKING DRAWINGS, SEE SPECIAL PROVISIONS.

FOR FALSEWORK AND FORMWORK, SEE SPECIAL PROVISIONS.

PROJECT NO. B-6028
MACON COUNTY
STATION: 15+25.00 -L-

SHEET 2 OF 3

STATE OF NORTH CAROLINA
DEPARTMENT OF TRANSPORTATION
RAI FTGH

SOLDIER PILE RETAINING WALL

DocuSigned by: D. Wesley Jones
68C7E5EFD4F8...
NORTH CAROLINA PROFESSIONAL SEAL 038640 ENGINEER WESLEY JONES
12/10/2021

STV 100 Years
STV ENGINEERS, INC.
900 West Trade St., Suite 715
Charlotte, NC 28202
NC License Number F-0991

DOCUMENT NOT CONSIDERED FINAL UNLESS ALL SIGNATURES COMPLETED

REVISIONS						SHEET NO.
NO.	BY:	DATE:	NO.	BY:	DATE:	W-2
1			3			TOTAL SHEETS
2			4			14

DRAWN BY : TJT DATE : 11-17
CHECKED BY : JTG DATE : 11-17
DESIGN ENGINEER OF RECORD : JWJ DATE : 9-18

JJones R:\Structures\ustation\401_025_17BP.14_R.I57_SMU_SPRW02.dgn 6:28:12 PM 12/1/2021