DocuSign Envelope ID: 30BC06DA-8502-46FC-83DC-478BC8625065

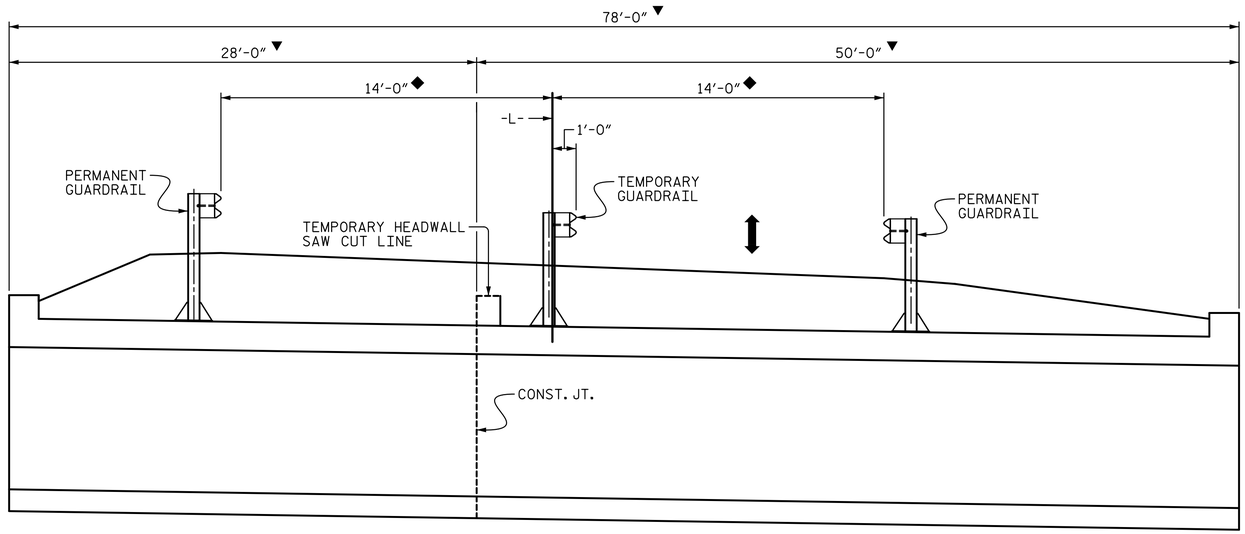

PHASE 2B

LOOKING UPSTATION

1. CONSTRUCT LEFT PORTION OF PROPOSED CULVERT.
2. SAWCUT TEMPORARY HEADWALL 1'-0" MIN. BELOW TOP OF TEMPORARY HEADWALL.
3. REMOVE G2 BARS COMPLETELY AND CUT S2 BARS 2" MIN. BELOW SAW CUT OF TEMPORARY HEADWALL. REPAIR AREAS WHERE S2 BARS ARE REMOVED USING A BONDING AGENT AND GROUT. SUBMIT A REPAIR PLAN TO RESIDENT ENGINEER FOR APPROVAL PRIOR TO BEGINNING REPAIR WORK.

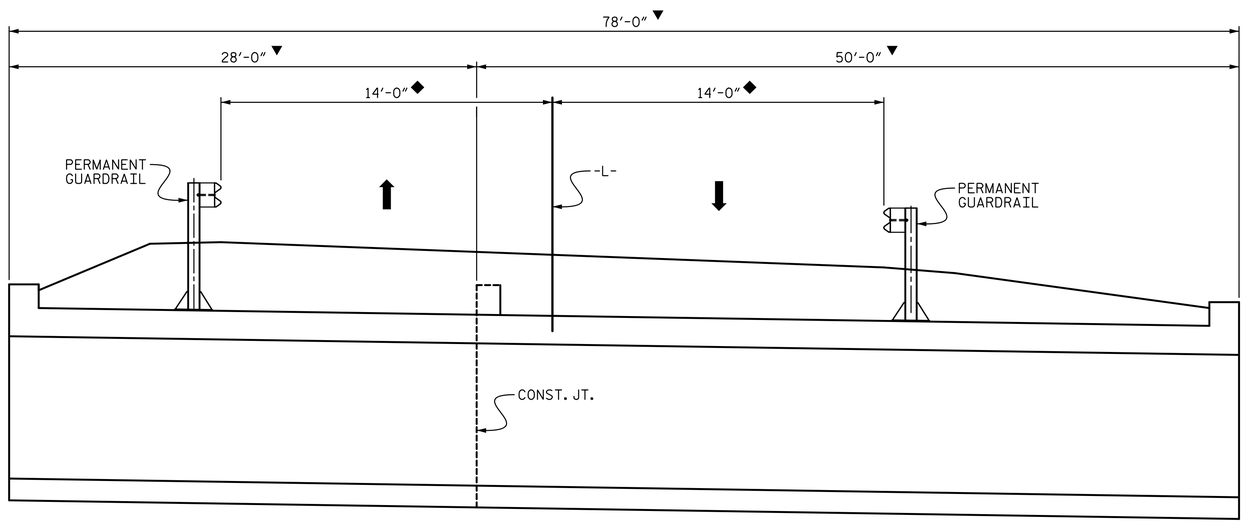

PHASE 3

LOOKING UPSTATION

1. REMOVE TEMPORARY GUARDRAIL AND REPAIR TOP SLAB, IN ACCORDANCE WITH THE STANDARD SPECIFICATIONS. RESIDENT ENGINEER TO DETERMINE IF REPAIRS TO TOP SLAB ARE NEEDED.
2. PAVE ROAD IN ACCORDANCE WITH ROADWAY PLANS.

NOTES

ALL MATERIALS AND LABOR REQUIRED FOR REMOVING PORTIONS OF THE TEMPORARY HEADWALL, REMOVING REBAR FROM TEMPORARY HEADWALL, AND REPAIRING AREAS WHERE REBAR WAS REMOVED FROM TEMPORARY HEADWALL ARE CONSIDERED INCIDENTAL AND SHALL BE INCLUDED IN THE VARIOUS PAY ITEMS. NO ADDITIONAL PAYMENT WILL BE MADE FOR REMOVING AND/OR REPAIRING THE TEMPORARY HEADWALL.

ALL MATERIALS AND LABOR REQUIRED FOR REPAIR OF TOP SLAB FROM REMOVING TEMPORARY GUARDRAIL, IF NECESSARY, ARE CONSIDERED INCIDENTAL AND SHALL BE INCLUDED IN THE VARIOUS PAY ITEMS. NO ADDITIONAL PAYMENT WILL BE MADE FOR REMOVING AND/OR REPAIRING THE TOP SLAB.

PROPOSED CULVERT WINGS NOT SHOWN FOR CLARITY.

◆ MEASURED RADIAL TO PROPOSED -L-

▼ MEASURED ALONG PROPOSED CULVERT

PROJECT NO. B-6028

MACON COUNTY

STATION: 15+25.00 -L-

SHEET 3 OF 11

DocuSigned by: Wesley Jones 88C7E5EFD4F8...

NORTH CAROLINA PROFESSIONAL SEAL 038640 ENGINEER J. WESLEY JONES

12/10/2021

STV 100 Years

STV ENGINEERS, INC.
900 West Trade St., Suite 715
Charlotte, NC 28202
NC License Number F-0991

DOCUMENT NOT CONSIDERED FINAL UNLESS ALL SIGNATURES COMPLETED

STATE OF NORTH CAROLINA
DEPARTMENT OF TRANSPORTATION
RALEIGH

CULVERT STAGING PLAN (SHEET 2 OF 2)

REVISIONS								SHEET NO.
NO.	BY:	DATE:	NO.	BY:	DATE:			C-3
1			3					TOTAL SHEETS
2			4					14

DRAWN BY :	LEM	DATE :	8-17
CHECKED BY :	JAD	DATE :	11-17
DESIGN ENGINEER OF RECORD :	JWJ	DATE :	12-21

JJones 12/1/2021 6:24:31 PM R:\Structures\ustation\401_005_I7BP.I4.R.I57_SMU_RCBC03.dgn