DocuSign Envelope ID: 30BC06DA-8502-46FC-83DC-478BC8625065

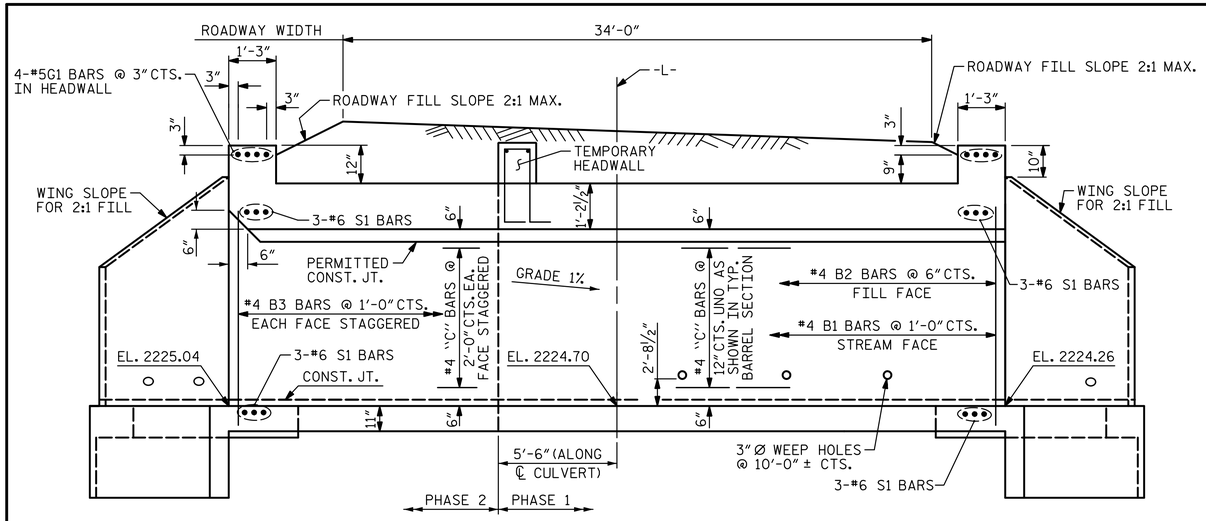

INTERIOR WALL EXTERIOR WALL

CULVERT SECTION NORMAL TO ROADWAY

(FOR TEMPORARY HEADWALL, SEE SHEET C-2)
(GUARDRAIL NOT SHOWN FOR CLARITY)

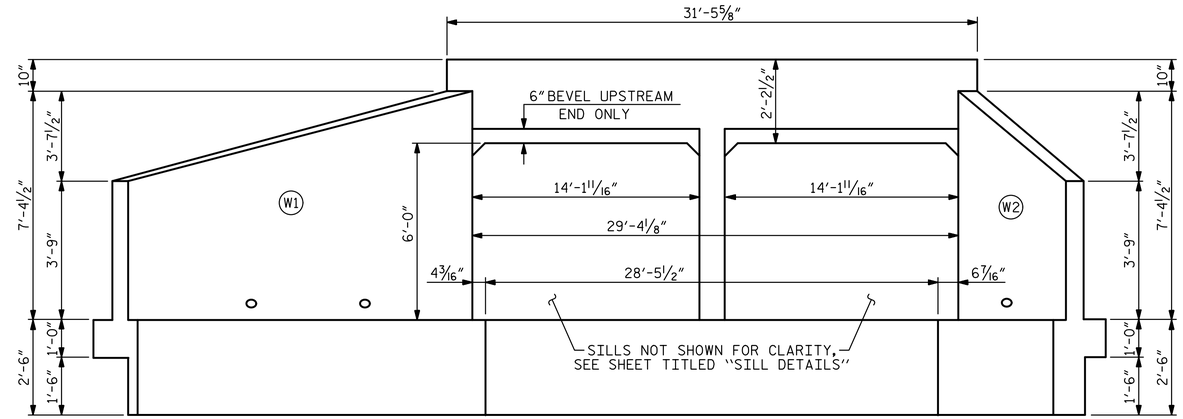

END ELEVATION AT INLET NORMAL TO SKEW

I HEREBY CERTIFY THESE PLANS ARE THE AS-BUILT PLANS

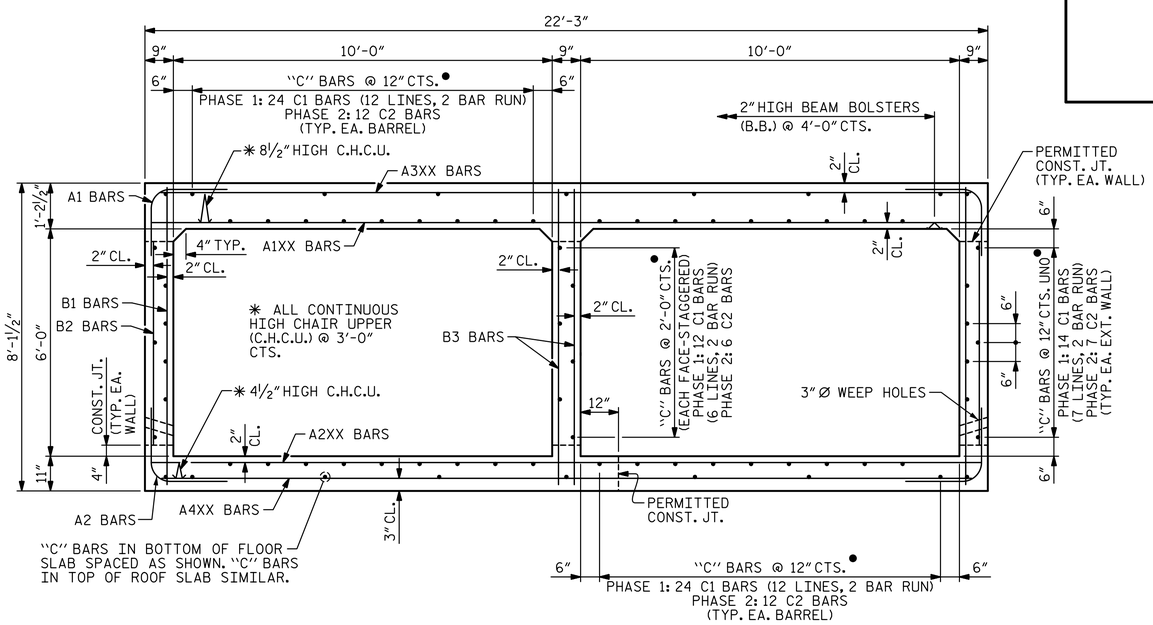

RIGHT ANGLE SECTION OF BARREL

THERE ARE 74 "C" BARS IN SECTION OF BARREL.

● PHASE 1: C1 BARS ARE IN 2 BAR RUNS WITH A MINIMUM SPLICE LENGTH OF 2'-5".
PHASE 2: C2 BARS ARE IN A SINGLE BAR RUN, SPLICED TO THE C1 BARS FROM PHASE 1 WITH A MINIMUM SPLICE LENGTH OF 2'-5".

NOTE: IF FIELD CONDITIONS DO NOT PROVIDE THE NECESSARY SPACE FOR A 2'-5" LAP SPLICE BETWEEN SOME/ALL OF THE PHASE 1 C1 BARS AND THE PHASE 2 C2 BARS, MECHANICAL SPLICES ARE PERMITTED TO MAKE THIS SPLICE. NO ADDITIONAL PAYMENT WILL BE MADE FOR MECHANICAL SPLICES. ALL MATERIAL AND LABOR COSTS FOR PROVIDING AND INSTALLING MECHANICAL SPLICES SHALL BE INCLUDED IN THE UNIT PRICE BID FOR "REINFORCING STEEL".

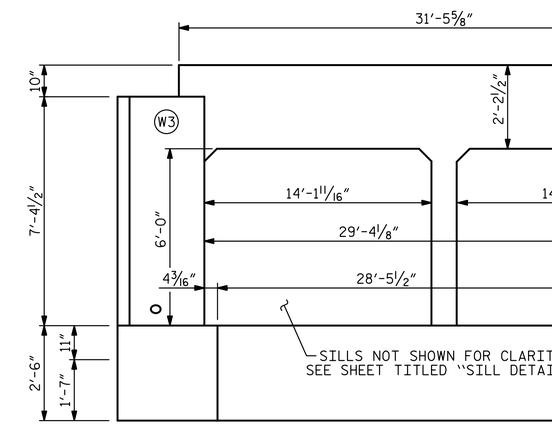

END ELEVATION AT OUTLET NORMAL TO SKEW

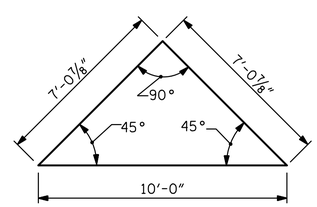

SKEW TRIANGLE

PROJECT NO. B-6028
MACON COUNTY
STATION: 15+25.00 -L-

SHEET 5 OF 11

DocuSigned by: D. Wesley Jones 68C7E5EFD4194...

NORTH CAROLINA PROFESSIONAL SEAL 038640 ENGINEER J. WESLEY JONES
12/10/2021

STV 100 Years
STV ENGINEERS, INC.
900 West Trade St., Suite 715
Charlotte, NC 28202
NC License Number F-0991

DOCUMENT NOT CONSIDERED FINAL UNLESS ALL SIGNATURES COMPLETED

STATE OF NORTH CAROLINA
DEPARTMENT OF TRANSPORTATION
RALEIGH

DOUBLE 10'-0" X 6'-0" CONCRETE BOX CULVERT ON SR 1528 AT ELLIJAY CREEK 135°-00'-00" SKEW

REVISIONS								SHEET NO.
NO.	BY:	DATE:	NO.	BY:	DATE:			C-5
1			3					TOTAL SHEETS
2			4					14

DRAWN BY :	LEM	DATE :	8-17
CHECKED BY :	JAD	DATE :	9-17
DESIGN ENGINEER OF RECORD :	JWJ	DATE :	12-21

JJones R:\Structures\ustation\40L_009_ITBP_R_157_SMU_RCBC05.dgn 12/1/2021 6:25:22 PM