DocuSign Envelope ID: 30BC06DA-8502-46FC-83DC-478BC8625065

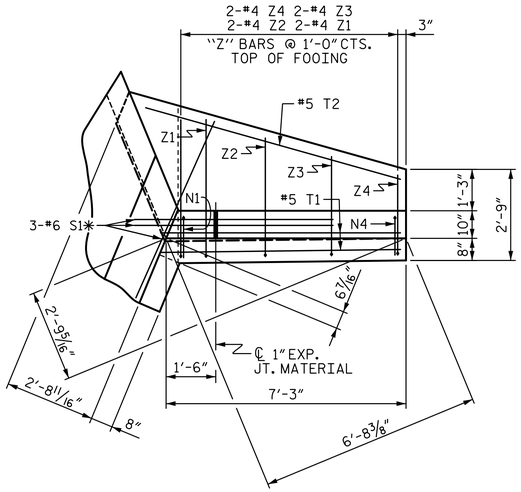

PLAN W2

✱ S1 BARS @ BOTTOM OF FLOOR SLAB & FOOTING

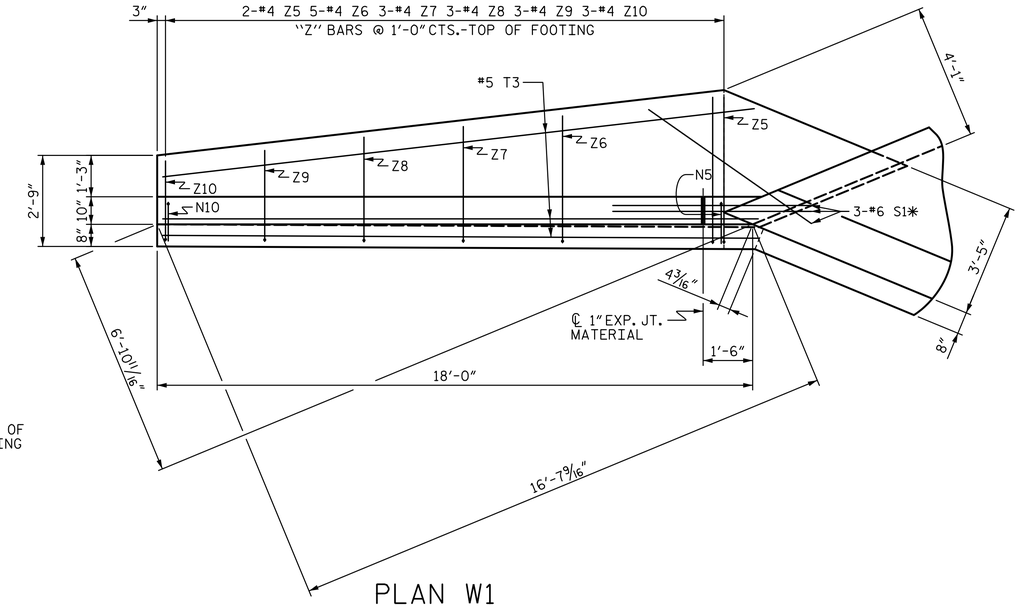

PLAN W1

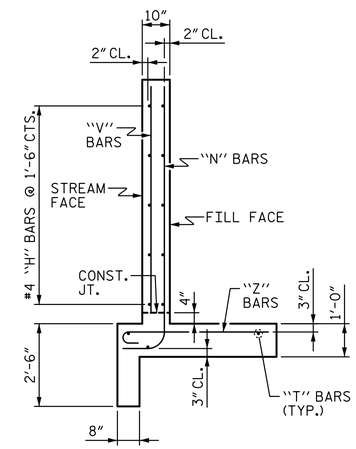

TYPICAL WING SECTION

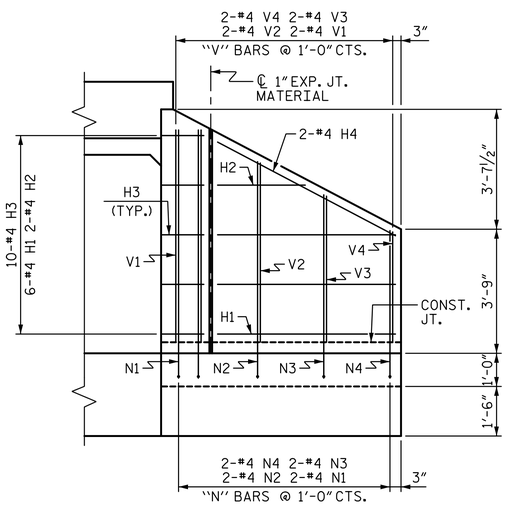

ELEVATION W2

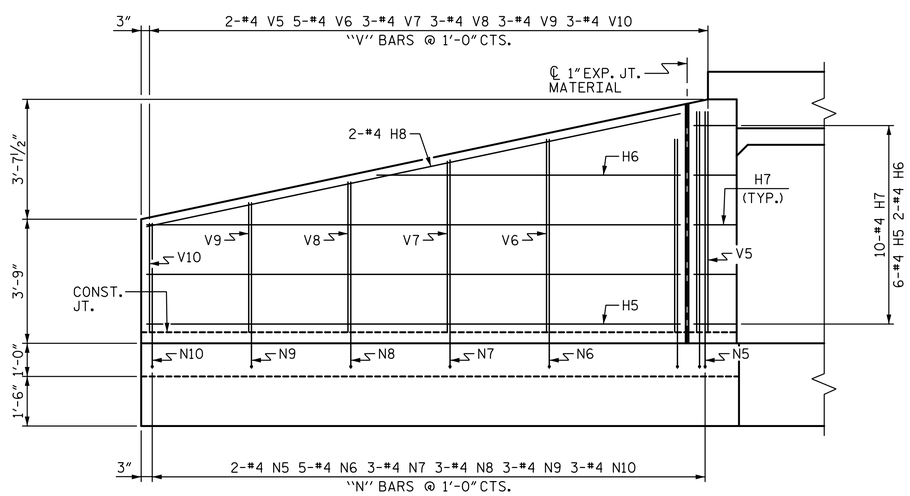

ELEVATION W2

PROJECT NO. B-6028

MACON COUNTY

STATION: 15+25.00 -L-

SHEET 8 OF 11

STATE OF NORTH CAROLINA
DEPARTMENT OF TRANSPORTATION
RALEIGH

WINGS FOR CONCRETE BOX CULVERT H = 6'-0" SLOPE = 2:1 135°-00'-00" SKEW

DocuSigned by: D. Wesley Jones
68C7E5EFD4F8...

NORTH CAROLINA PROFESSIONAL SEAL 038640 ENGINEER WESLEY JONES
12/10/2021

STV 100 Years
STV ENGINEERS, INC.
900 West Trade St., Suite 715
Charlotte, NC 28202
NC License Number F-0991

DOCUMENT NOT CONSIDERED FINAL UNLESS ALL SIGNATURES COMPLETED

REVISIONS						SHEET NO.
NO.	BY:	DATE:	NO.	BY:	DATE:	C-8
1			3			TOTAL SHEETS
2			4			14

DRAWN BY :	LEM	DATE :	8-17
CHECKED BY :	JAD	DATE :	9-17
DESIGN ENGINEER OF RECORD :	JWJ	DATE :	12-21

JJones 12/1/2021 6:26:48 PM R:\Structures\ustation\401_015_17BP.14.R.157_SMU_RCBC08.dgn